Part number

MIO 16.50

Hood, C-TYPE series, with 4 pegs, M50 side cable entry, size "77.27", high construction, inclined

Product description	
Product type	Hood
Series	C-TYPE
Closing type	With 4 pegs
Size	Size "77.27"
Cable entry	Side cable entry with adapter M50
Specification	High construction, inclined
Technical data	
IP degree of protection	IP65 / IP66 / IP69
Further technical details	
Weight	255,60 g
Operating temperature range (min, max)	-40°C...+125°C

Material properties	
Main material	Aluminium die-cast
Colour	RAL 7040 grey
RoHs conformity	Compliant
China RoHs - EFUP	E
REACH SVHC substances	No
Approvals / Standards	
Certifications	DNV, BV
UL	ECBT2
cUL	ECBT8
General ordering information	
EAN13 code	8015747152570
eCl@ss 8.1	27440202
ETIM 7.0	EC000437
Packaging Information	
Sub-packaging weight	0,26 kg
Sub-packaging description	Plastic packaging
Sub-packaging quantity	1 Pcs
Sub-packaging EAN barcode	8015747161572

Part number

MIO 16.50

Catalogue drawings

CIO MIO

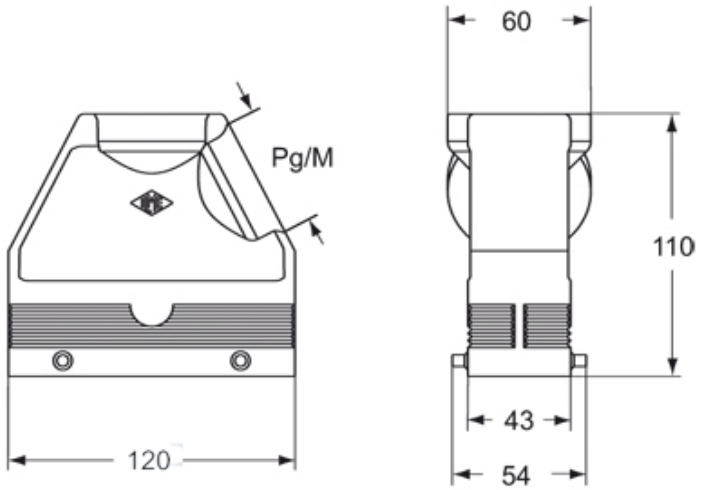

Notes

Dimensions shown in mm are not binding and may be changed without notice.